Drip Irrigation for the Mojave Desert

Produced by the Conservation District of Southern Nevada
With Funding Provided By the Bureau of Reclamation

Drip Irrigation ForThe Mojave Desert

October, 2007

Produced by the Conservation District of Southern Nevada

Written/Editted by Joseph Fortier ASIC, CID, CIC, CGIA, CLIA
and Kimberly Vilt

Funding for this project was provided by the Bureau of Reclamation

Thank you to the following individuals and organizations for their contributions and thoughtful edits:

Judy Currier, Jennifer Szwejbka, Jon Wardlaw, Teri Knigh and High Desert RC&D, Tina Mullis, Shelly Walker- Salco Products, Chris Abbott-Toro

Table of Contents

Introduction	pp. 1-2
About Drip Irrigation	pp. 3-5
Drip System Components	pp. 6-9
Landscape Design	pp. 10-13
Your Irrigation Plan	pp. 14-19
Installing the Irrigation System	pp. 20-22
System Maintenance	pp. 23-25
Scheduling for Drip Irrigation	pp. 26-28
Sample Irrigation Plans and Details	pp. 29-36
Troubleshooting	p. 37
Glossary	p. 38
Biography of Joseph Fortier	p. 39
Bibliography and Credits	Inside back cover

INTRODUCTION

Most of us probably aren't too interested in the intricacies of our yard's irrigation system. However, a relaxing outdoor oasis bursting with seasonal blooms and varying shades of green is a valued treasure to nearly everyone. Unfortunately you can't have one without the other. This guide is for you, the intrepid homeowner who wishes to carve out your own piece of backyard nirvana or front yard showpiece. Maybe you're new to the area, or unfamiliar with desert gardening. Maybe you've lived in the Desert Southwest your entire life, having sorely borne the nickname "plant killer" for the withered landscape that becomes your yard each July. Fret no more! Whether green thumb or gardening novice, this guide will give you the tools and knowledge to design and install a drip irrigation system perfectly suited to the needs of YOUR landscape.

Aside from the obvious benefits to your plants, drip irrigation saves water. While it may be tempting to blame the fountains and pools along the Strip for the abundance of water use in Southern Nevada, the majority of our water supply is used by residents. According to the Southern Nevada Water Authority, 70 percent of a household's water is used outdoors. Of that, 20-30 percent is wasted due to irrigation leaks and runoff. That's roughly 30 billion gallons of wasted water every year! Properly installed and maintained drip irrigation can use 30 to 60 percent less water than conventional irrigation systems, while reducing water loss from evaporation and water runoff. A 1990s study done in the Phoenix, AZ area documented water waste associated with improperly designed and installed drip systems. One of the biggest reasons for the poor study results was that trees, shrubs and groundcovers were installed on the same circuit, resulting in too much water supplied to shrubs and not enough water to trees. The shrubs were being over-watered and trees under-watered, negatively affecting the quality of the landscaping. This guide was developed to provide information on designing a proper drip system while balancing the water needs between low and medium water use plants. Using the information provided in this guide can increase drip irrigation efficiency, save water, increase landscape health and increase your property value. Do your part to help quell the drought. Install drip irrigation.

How to Use This Guide

Whether you're new to landscaping or a practiced hand, this guide can help you. The guide is broken down into sections that describe the different pieces of a drip system; shows how to select the right combination of pieces for your landscape; explains how to install the system; and teaches you how to maintain your system. Technical terms are highlighted in blue, and can be found in the Glossary. If you're new to drip, start at the beginning and read your way through the guide. If you are familiar with drip systems and are looking to make specific changes to your landscape, just flip to the appropriate section or installation detail to get your job done. Different sections of the guide can be easily found by checking the index conveniently found along the right side of the page. If you still need help after reading this guide, take a look at the resources listed in the bibliography or visit your local irrigation supplier to ask the experts. Have fun and good luck!

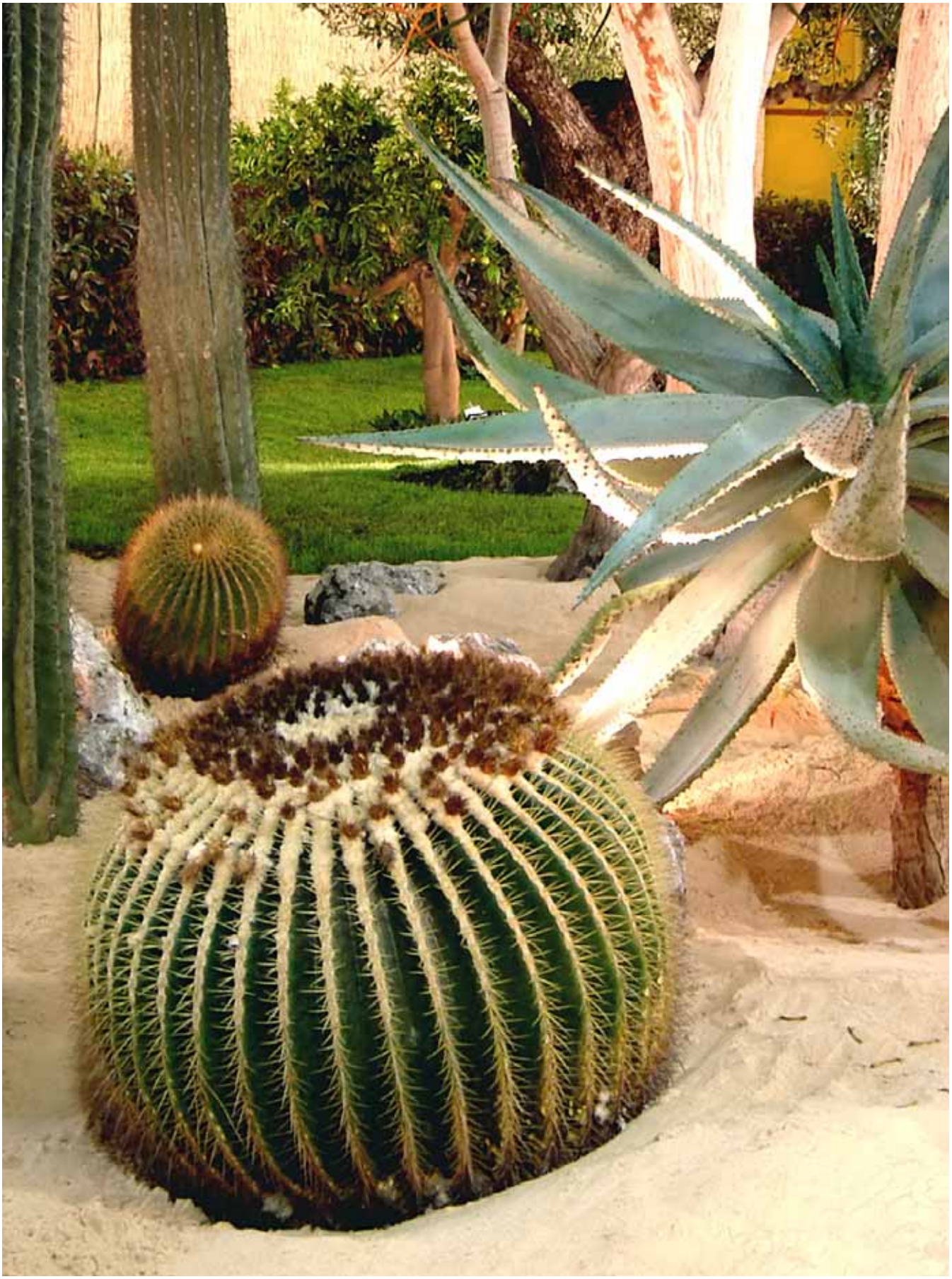

ABOUT DRIP IRRIGATION

So What is Drip Irrigation Anyway?

Drip irrigation is the slow application of water directly to the root zones of plants and trees. A drip system is designed with a series of emitters that deliver measured amounts of water to meet the individual needs of each plant in your landscape. Since your landscape likely contains a diverse amount of plants, the flexibility to apply different amounts of water for varying amounts of time is essential to the health of each plant and tree.

Some forms of drip irrigation have been around since the turn of the century. With its popularity for use in residential landscapes increasing over the past three decades, drip irrigation technology has grown and new products have developed. While the concept of drip is simple, the design, installation and management of an efficient system requires planning and attention to detail – after all, you are creating a system perfectly tailored to meet the needs of your yard.

Why Drip is Best – The Advantages of Drip Irrigation In Our Desert Climate

Many people feel uncomfortable with drip because it is less visible than the traditional sprinkler systems we grew up with. We live in the desert right? A plant can't survive without a regular drenching and pool of water to wade in. Contrary to this belief, drip irrigation is the best choice for your landscape. When water is applied in precise amounts directly to plant roots, the plant has the healthiest environment to grow in. It is just as easy to kill a plant with too much water as it is with too little.

A properly designed, installed and maintained drip system improves the quality of landscapes and increases water efficiency. A healthy landscape is a valuable investment in your home. It is well known, that a regionally appropriate, healthy landscape can increase your home value over twenty five percent! Drip irrigation can also decrease the amount of time and money you spend maintaining your yard.

A beautiful landscape is nice, but a healthy community is even nicer. Drip irrigation is a proven water saver, conserving every drop of this precious resource in our parched desert climate. Because you're supplying water directly to your plant's roots you don't waste water with drip irrigation systems, making it the ideal watering choice for Southern Nevada.

Benefits of Drip Irrigation

Water Efficiency

Drip irrigation delivers just the right amount of water to a plant's root system reducing evaporation and eliminating overspray. With proper design and scheduling, drip irrigation may use 30 to 60 percent less water than conventional irrigation systems. Reducing water waste in our yards is a crucial step to conserving a precious resource and battling droughts.

Quality of Landscaping

Drip irrigation gives plants an optimum balance of moisture and oxygen around their roots. The slow, regular, even application of water results in uniform growth and, with proper scheduling, will decrease the wet / dry fluctuation that stresses plants. Drip also increases the growth of plants, yields of fruits and vegetables and enhances the economic value of landscapes.

Reduced Weeds and Pests

Because water is being applied only to the **root zone**, areas outside the zone remain dry. This reduces weeds that compete with plants for water and nutrients. When plants are stressed, insects invade them easily. Drip irrigation can reduce the stress placed upon plants. By keeping the plant's **foliage** dry, water-born pests (especially fungal diseases) are reduced.

Versatility

With drip irrigation the watering needs of different plants within a landscape can accurately be met. Drip systems can be easily modified to accommodate changes in landscape planting.

Slopes and Soils

Sprinklers can create wasteful runoff when used to water **slopes**, **berms** or plants in loose sandy soils. Drip emitters apply water at a slow rate, which allows the moisture to soak into the soil and reduce runoff. When using pressure-compensating emitters the flow of water for the individual devices is the same regardless of the slope. Sandy soils frequently cannot store large amounts of water and when applied at a fast rate water can be lost due to deep percolation beyond the plant's root zone.

Economy

A relatively small investment in drip irrigation can save you money by watering your landscape more efficiently. This means less money from your pocket will go towards replacing dying or poorly performing plants each season. Drip will also save you time in terms of weed control, pest management and hand watering.

New Landscapes

A drip system is ideal for a new landscape because plants with similar water requirements can be grouped and irrigated together by adjusting the number of emitters to each plant. This allows you to meet the individual water needs of many different plants installed on the same control valve.

Existing Landscapes and Retrofitting

When performing a **retrofit** on an existing landscape, drip irrigation can be installed on or near the surface where digging would damage mature plant roots. Flexible poly tubing can be covered with a ground cover or **mulch**. Many drip products can be easily installed on existing Polyvinyl Chloride (PVC) piping if a sprinkler system is already in place.

Water Saving Tip

Applying shredded bark, compost or a similar landscape mulch over exposed tubing not only deters vandalism, it conserves water. The insulation mulch provides to plant roots keeps them cool and reduces their water requirements and the rate of evaporation.

Narrow and Oddly Shaped Areas

Narrow or oddly shaped areas are difficult to water with ordinary sprinkler irrigation, which usually sprays outside landscaped areas onto streets, walkways and buildings. This not only wastes water, but can damage the waterlogged buildings and structures. Drip irrigation installed around trees and shrubs eliminates overspray and water waste outside the landscape area.

Vegetable Gardens

Drip irrigation helps create the best growing conditions for vegetables. Planting rows also simplifies the layout and installation of irrigation lines. Proper irrigation has been proven to significantly increase the yield of fruit and vegetable crops.

Windy Sites

We've all seen the damage our local wind storms can do neighborhood trees. Drip irrigation provides the proper soil moisture conditions for strong, deep root systems that can keep large plants and trees from being blown over. And because drip puts water where it is needed, you won't waste water on windy days like you would with a sprinkler.

DRIP SYSTEM COMPONENTS

A drip irrigation system consists of several components. Getting to know each of these parts will help you in designing the right system for your needs. For best results the components should be made by the same manufacturer- the fitting should have the same manufacturer as the poly pipe, the hole punch should be made by the same manufacturer as the emitter. This will ensure a more precise fit between all of the individual pieces.

Emitters

Emitters are the most important part of a drip irrigation system. They deliver water to the plants at a slow, consistent rate. They can operate at various pressures ranging from 10-50 pounds per square inch (PSI) and can deliver between ½ gallon to 24 gallons of water per hour (GPH). For your landscape, look for emitters with PSI between 20-40 and a delivery rate of 1-2 GPH. Because water pressure frequently varies, emitters should be pressure compensating so that water will be delivered at the same rate. Some emitters will have built in check valves to avoid dirt and debris from being pulled back into the tubing or pipe when the system shuts down. Emitters with built in check valves are a real advantage when the outlet of the emitter is buried under ground.

Inline Drip Tubing

Inline drip tubing is poly pipe with emitters installed directly in the pipe at uniformly spaced intervals between the emitters. Inline drip tubing can range from ¼” in size to ½” in size. Emitter spacing in ¼” inline tubing is usually six (6) to 12 inches apart. In ½” inline tubing the emitter spacing is usually 12 inches, 18 inches, or 24 inches apart. The output of the emitters for inline tubing can range from 0.25 GPH to 1.00 GPH. The emitters can be pressure compensating or non-pressure compensating. If the inline tubing is going to be installed for less than 50 feet, non-pressure compensating emitters are adequate. For inline tubing that will be installed longer than 50 feet, pressure compensating emitters are recommended. Be careful if using any tubing that has laser holes or porous pipe as they tend to clog easy and will not have an even distribution of water from the beginning of the pipe to the end.

Drip Tubing

Drip tubing delivers water to the laterals. Two sizes are typically used, ½ inch and ¼ inch. When purchasing tubing, use the same manufacturer’s pipes and fittings because size may vary from one manufacturer to another.

Drip Laterals

Drip laterals consist of either polyethylene drip tubing, flexible PVC tubing or PVC pipe. They supply water to the drip emitters. See picture to the right for an example.

Control Valves

Valves control the flow of water to the irrigation lines. Electric or manually operated valves open and close to allow water to flow to separate irrigation zones within your landscape.

Electric control valves are operated by an irrigation controller (clock) that can be programmed with specific times and cycle durations. When using an electric clock, check the manufacturer's specifications to ensure the valve will operate at the flow conditions for that station. If flow conditions are below the manufacturer's recommendations, the valve may work at first but can fail prematurely (2 to 5 years) instead of lasting 10 or more years.

Filters

The filter usually consists of a fine mesh screen that protects emitters from becoming clogged with dirt and debris. For most drip irrigation systems, a filter with a 150 mesh screen will be suitable. Drip systems using ½ GPH emitters perform better if a 200 mesh screen is used. It is recommended that filters are installed after the control valves and before the pressure regulators. Some filters may not hold up under the constant water pressure experienced before the control valve, but it is still the best place for them to protect the pressure regulator from potential dirt or debris clogs.

Water sources that contain sand or algae may require a different type of filtration. Check with your local drip irrigation supplier or the product manufacturer for products that will work best for your system.

Pressure Regulator

Most drip systems operate at a low pressure, usually between 20 and 40 PSI. The pressure regulator will maintain a constant pressure to the drip emitters.

Your home's water source may vary in pressure and if the pressure is too high, your drip irrigation system can be damaged. The pressure regulator is recommended to be installed after the control valves and filters, and before the drip emitters. There can be multiple pressure regulators installed in a zone, especially on slopes or large zones to maintain a more constant pressure throughout. Like some electric control valves, pressure regulators may have specific flow rates. On slopes, the pressure regulator should be installed in the middle of the top third of the area being covered by the regulator.

Flush Valve

Flush Valves are installed at the ends of every lateral or drip tubing for routine flushing and cleaning of dirt and debris from the system. Flush valves can be manual or automatic. Emitters with built-in check valves should always have a manual flush valve at the end of every lateral.

120 gallons per hour divided by 60 minutes = 2 gallons per minute

How do you know how much water your drip irrigation system may be delivering? It depends on the type of emitters installed. For example, let's say you have 120 one-gallon-per-hour emitters. This would equal an irrigation rate of two gallons per minute.

Controller / Clock

Irrigation controllers are electronic clocks that turn the irrigation system on and off at scheduled times. The clocks are programmed with run times for each station to ensure that the plants receive sufficient water. Select a controller that has the ability to run multiple programs. This allows you to meet the individual needs of your landscape's zones. For example, trees, shrubs, grass and garden areas should all be on separate stations because each requires different lengths of watering times and a variable number of days between waterings. Be sure to install a controller that has a sufficient number of stations to allow for your current needs and the addition of valves in the future.

Water Saving Tip

Check with the Southern Nevada Water Authority for rebates on "smart controllers". Smart controllers are irrigation clocks that automatically adjust irrigation run times in response to environmental changes like wind and rain.

For help with setting the schedule on your irrigation clock, check with your local nursery, irrigation supplier or water supplier. Free irrigation clock demonstrations are offered at the Acacia Demonstration Gardens in the City of Henderson and at the Gardens at the Las Vegas Springs Preserves.

A typical valve assembly

Air Vents

Air vents protect the irrigation system from air buildup. They also prevent dirt from being drawn into the piping through an emitter when the system shuts off. Air vents should always be installed at the highest point(s) in a zone when emitter outlets are buried. When emitters with built in check valves are used, installing an air vent is not recommended.

Backflow Preventers

A backflow prevention device keeps irrigation water from flowing back into and contaminating your drinking water supply. The most commonly used backflow preventers for irrigation are the pressure vacuum breaker and the reduced pressure principle assembly. The reduced pressure principle assembly is recommended for use when fertilizer is incorporated into the system. For proper installation, check with your community's local plumbing codes and install to the manufacturer's specifications.

LANDSCAPE DESIGN

Good design is critical to the success of a drip irrigation system. The first step is to complete a landscape design plan for your space. What kinds of plants will you use? How many? Where will you place them? Although you may plant your yard in phases, it's important to plan for future needs, such as mature plant size and changes in plant numbers. Remember, those baby plants will grow! While you don't need to install all of the emitters required for your adult plants right away (it is recommended to install all the emitters, as the plants grow it can be harder to install them later), it's important to design your plan with the mature plant's water and space requirements in mind. With careful planning and attention to design details, you can prevent future headaches and maintain a healthy landscape for years to come.

The Landscape Plan

Site Information

The first step in designing your landscape is gathering preliminary site information. Pay special attention when collecting this information. Remember that the amount of water used in drip irrigation is less than traditional systems and the placement of that water is key to the success of your landscape. You will want to collect information about your plants, microclimates and hydrozones in your yard, the location of slopes or berms, and the type(s) of soil in your yard. Begin with a developed landscape plan that shows features like hardscapes, local water source, slopes and their direction, and the plants you want to include. Draw a plan to scale (See Sample Plans pp. 29-30) using common residential measurements where one quarter inch equals one foot (1/4"=1'), one-eighth inch equals one foot (1/8"=1') or one inch equals 10 feet (1"=10').

Plant Material

Water requirements vary widely for different plants. You can learn a lot about plants that grow well in Southern Nevada by visiting local demonstration gardens such as the Acacia Demonstration Gardens in Henderson, or the Gardens at the Springs Preserve in Las Vegas. Taking the time to research plant choices will greatly help in the design process and possibly eliminate the frustration of plants failing to thrive. Regular watering is needed for all new plants in order for them to establish a strong root system. Identify which plants have high, medium and low water requirements and group them together according to their water needs. Additional sources of information include the Conservation District's Water Resources Guide and Sunset Magazine's Western Garden Book.

Water Saving Tip

Many native and desert adapted plants are attractive, drought-tolerant choices for your landscape. Combining different sizes and colors of these water conscious plants can lend your yard a lush feel, without unduly taxing local resources.

Microclimates

Even though we live in a desert climate, your yard is likely to contain several small sub-climates, known as microclimates. Factors influencing microclimates are sunny or shady areas, heat-absorbing surfaces such as buildings, heat reflecting surfaces such as pavement and high wind areas. Simplify the design process by grouping plants with similar requirements. For example, those in the shade require less water than those in the sun and should be on separate irrigation schedules and valves.

Hydrozones

Selecting plants according to their water requirements leads to the next step in the design process – establishing hydrozones. Hydrozones are areas that contain plants watered with the same irrigation method, on the same schedule. They are generally served by one valve. There are four types of hydrozones:

- *Mini-oasis* – The lush spots near your patio or other location where you are able to enjoy your favorite exotic plants.
- *Transition* – Plants that require some irrigation but are not water greedy.
- *Arid zone* – Select plants, which after becoming established, can live on minimum summer watering.
- *Turf* – Grass Areas.

The Soil-Water Relationship

Understanding how soil and water interact is an important aspect of successful drip irrigation. Soil is composed of mineral particles, air, water and organic matter. The size of the mineral particles determines the soil's texture and type. To a large extent the size and shape of the mineral particles also determine the volume of pore space within a soil. Pore space is the area between the mineral particles that is available to hold water and air. The three basic soil texture types are sand, loam and clay. See Figure 1.

Sand

Sandy soils contain large, angular mineral particles. This means a large volume of pore space is available between the particles. Unfortunately, sandy soils do not hold water very well. In sandy soils, water drains vertically (down) and does not flow sideways or laterally. Emitters must be placed closely together in sandy soils. The suggested emitter spacing is 18 inches to 24 inches apart. With sand, plants are watered more often but with less amounts of water than loam or clay.

Loam

A loamy soil is often referred to as a mixture of clay and sand. This mixture of textures produces a soil between the extremes of clay and sand. Pore space allows water to drain with ease but not so quickly that the plant can't absorb it. Emitters are placed three (3) feet to four (4) feet apart in loamy soil. You can schedule watering for a greater number of minutes, but less often than sand.

Clay

Clay soils contain the smallest mineral particles. These particles fit together very closely and leave a small volume of pore space. Water moves downward slowly. Small pore spaces help water move laterally by several feet. Emitters can be placed five (5) feet to six (6) feet apart in clay soils. Adjust your watering in clay soils to water less frequently and for a longer period of time. To avoid water runoff you may need to water for a moderate period of time (usually about 20 minutes), wait for about one hour and water again.

Determining Soil Types

To determine which type of soil you have in a given area take a handful of dry soil, grip tightly and release. Sandy soils will be loose and crumble easily. Loam will hold together but easily break apart. Clay soil will mold without breaking. You may have all three soils in a single soil profile. Always space your emitters to the type of soil that requires less distance between the emitters.

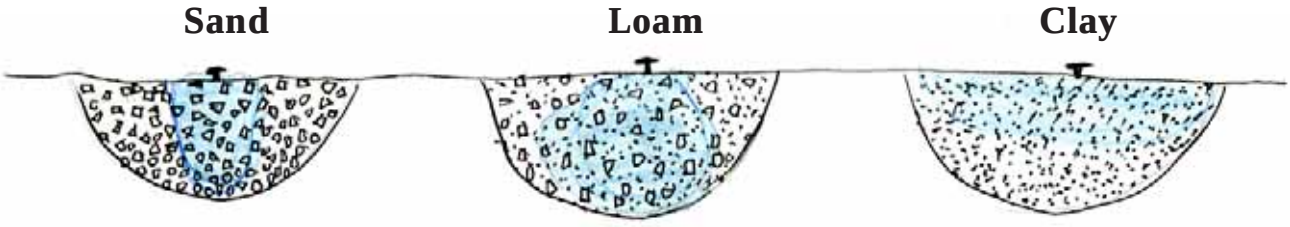

FIGURE 1: Water movement in the different soil types.

The Plant - Water Relationship and Development of a Healthy Root Zone

Understanding where roots grow in the soil is essential to knowing where to water. Did you know that the majority of water and nutrient absorption takes place in the upper soil layers? Applying this bit of knowledge to your irrigation practice will result in better watering and healthier plants.

It goes without saying that different plants have different watering needs. But remember that where and how much water you apply will vary from plant to plant depending on the type of plant, its size and how deep and wide its root system spreads. The soil you grow your plant in will also affect water requirements (see the previous page). Low water use plants can use about one-third less water than a moderate water use plant.

Weather conditions play an important role in the amount of water plants can use. Hot or dry days will require more water than humid or cold days. Windy days can leave a plant particularly parched. Competition from adjacent plants is also a factor because the more plants are grouped together, the faster water is used. Additionally, new plants require water more frequently than established plants.

When irrigating, it is generally best to thoroughly soak the root zone and allow the soil to dry between waterings. Slow, deep applications of water may be needed occasionally to flush salts from the soil around the root zone.

The type of plant and the soils they are planted in will determine where roots can grow. Turf grass, depending on the type can grow from four (4) inches deep to over 12 inches deep. In Southern Nevada tall fescue and Bermuda grass can have root systems over 12 inches deep if the soil is adequate. Shrub roots can be between 12 inches and 15 inches deep. A tree's root system is most often between 15 inches to 24 inches deep. Compacted soils can limit root growth. If you have compacted soils where your plants are to be installed, loosen the soil around the plants to a minimum of the mature plant size if possible.

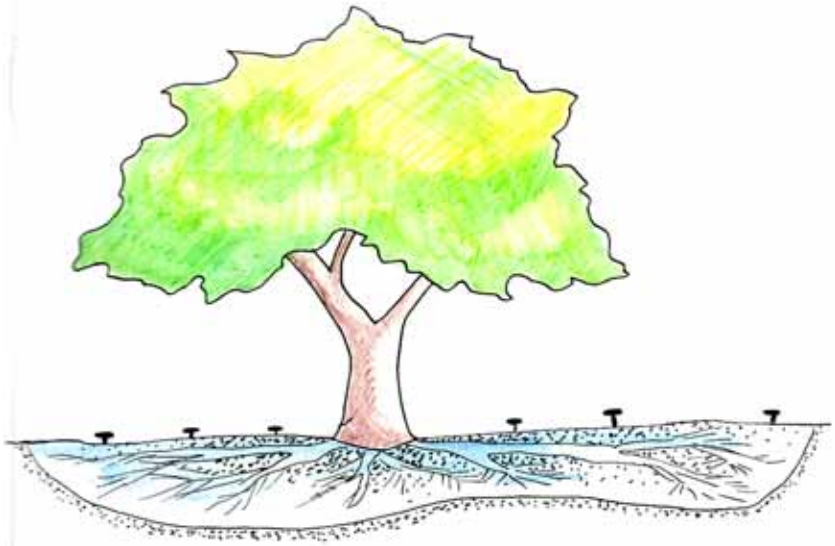

FIGURE 2: Correctly placed emitters promote the developmnet of a healthy root system.

YOUR IRRIGATION PLAN – PUTTING IT ALL TOGETHER

Key Considerations For Your Irrigation Plan

Now that you've done your homework it's time to put it all together. A detailed plan that includes all of the information you've gathered will be your yard's blueprint. This next step will guide you through how to insert irrigation components into that plan.

Water Source

Note meter size, location and water pressure on your plan. If you don't know the size of your service meter, you can find that information on your monthly water bill. You can also check with your local water provider to find out how much water is available for your

Meter Size and Water

5/8" Meter	10-12 GPM
¾" Meter	12-15 GPM
1" Meter	20-25 GPM

meter size. The chart above lists the amount of water available based on the size of your meter. If you have low water pressure or small piping after the meter, the flow through the water meter may be less than the chart. To properly protect yourself and the water supply, an appropriate backflow prevention device is needed to avoid contamination of the drinking water system. Refer to page 9 for more information on backflow prevention.

Soil Type

Irrigation design and scheduling will be greatly affected by the soil's ability to hold moisture. Make sure you took the time to get to know your soil. If you still need to get acquainted, refer to page 12 to determine the type of soil you have and soil-water relationships.

New Landscape

If you're starting from scratch, take the time to group plants according to their water needs. It is easier to water similar plants with the same valve. A common problem with new landscapes is failure to plan for the mature site. Remember, these plants will grow! Make sure to consider the water needs and root zone area of the mature plant. It may be best to install all the emitters needed for the mature plant at this point, saving you time and money in the future. If the emitters are not installed initially, make sure your set up can accommodate more emitters as the plant matures. Shorter but more frequent watering will be necessary at first to establish a strong root system. Because roots will grow where water is provided, an overlapping of wetted area is needed for proper root growth. Adequate soil

moisture needs to be provided for a minimum of three-quarters of the mature plant's root zone. As a plant grows, the original emitters need to be moved farther away from the trunk. Emitters left near the trunk could lead to crown rot or the plant may eventually grow over the emitters causing breakage and inaccessibility for repairs. Avoid installing tubing close to trees and at the base of large shrubs as roots can tear the tubing and crush or break the piping.

Existing Landscape

Note the location of any existing sprinklers. If your system is old you may choose to abandon it. Remember that sprinklers and drip emitters apply water at different rates. They should not operate from the same valve. You will need to add a filter and a pressure regulator to protect your drip system when using an existing control valve.

When converting an existing landscape care should be taken with trees and shrubs to ensure adequate water is applied to the existing root system. When retrofitting sprinklers from under and around trees special care should be given not to disturb the soil covering the tree's existing root system. Most root systems for a tree can extend two to three times the canopy area! Refer to Figure 2 on page 13.

Your new irrigation system needs to be able to supply water to the existing root system. The best location is about one-third of the way from the trunk, extending beyond the canopy. For minimum coverage, place emitters around the drip line and a few feet outside and inside the drip line of each plant. Around large plants like trees, inline drip irrigation may work best.

Emitter Numbers and Placement

An important step in designing an irrigation system is meeting the changing water needs for plants as they mature. With a scaled plan, (you took the time to make that landscape plan, right?), you can determine the type, number and location of emitters needed. Consider each plant's variety, size and soil when selecting the kind of emitter needed. The size of the emitter depends upon the plant's water needs. The system should be designed to meet the maximum daily water requirement for mature plant size during the peak season. Remember to place emitters so that a minimum two-thirds of the projected mature root zone is watered.

For existing plants, the emitters should be placed around the canopy. See irrigation details A, D, E, F, G, H and I for suggested emitter placements. Emitters should be grouped to form circuits based upon microclimates, hydrozones and different plant water needs. A circuit is a group of emitters that is operated by the same valve. Trees should be on a separate valve from shrubs and groundcovers. All emitters on the same circuit must be connected to the same lateral line. Your irrigation plan will note the total number of emitters per plant. Exact emitter placement is usually determined at installation time, based on each individual plant. A minimum of two emitters per plant is recommended. This way if one emitter becomes clogged, plant stress will be noticed and the clogged emitter can be

repaired before the plant dies. When large numbers of emitters are needed, consider using inline drip tubing to reduce installation hassle and cost.

Emitters should be placed between two (2) and six (6) feet apart depending on your soil type. With sandy soil the emitters need to be placed about two (2) feet apart to maintain consistent moisture between the emitters. A loamy soil requires emitter spacing about four feet (4) apart and with clay soils, the emitters could be placed up to six (6) feet apart. When there is a question about what type of soil you have, place the emitters closer together.

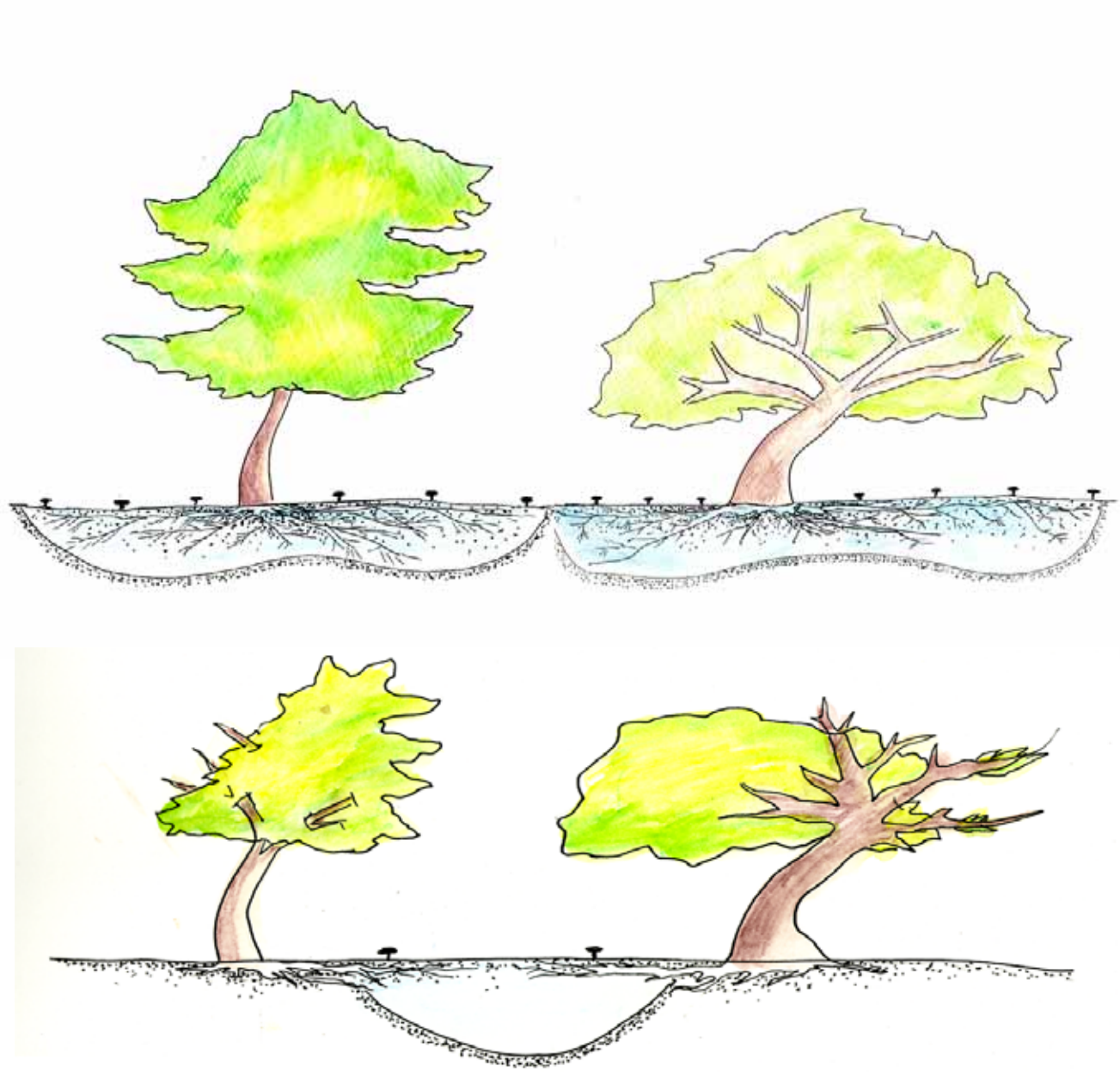

FIGURE 3: Note the difference proper emitter placement makes in the above illustrations. The top trees have a healthy mature canopy and root system, while those below suffer from improper placement of too few emitters.

Selecting Emitters

With larger plants, more emitters with higher flow rates are needed so that water is properly delivered to the larger root zone. Smaller plants require fewer emitters with lower flow rates to prevent runoff. Some drip irrigation manufacturers make emitters that emit water in excess of 2 GPH. Using emitters with higher flow than suggested on the chart on page 18 is acceptable, but remember to cover three-quarters of the plant's mature canopy with emitters to develop a sound root system.

Use the emitter selection chart on the facing page as a general guide to find the flow rate and number of emitters needed for each plant based on water needs of the mature plant. Mature plant sizes can be found on the plant identification tags that come with the plant when you purchase it, or in garden books like Sunset's Western Garden Book. To use the chart, locate the information located directly beneath your plant's diameter.

For example, a mesquite tree can have a 25' diameter and has low water needs. Based on the chart, you would need to install 22 2 GPH emitters to provide enough water to meet the mesquite tree's needs at maturity (see Details E-H for suggested emitter installations to meet your yard). It is suggested to install all the emitters when planting the tree as roots can grow three times faster (if moisture is in the soil) than the canopy of the tree. With a nice healthy root system, you will have a healthier tree that should withstand windy days and avoid being blown over.

Note: Higher water use plants may require the installation of additional emitters to ensure enough water is applied without the need to increase watering times.

Emitter Selection For Shrubs

Plant Water Use	Plant Diameter in Feet	2	4	6	8	10
Low	# Emitters	1	1	3	5	7
	Emitter Rate (GPH)	0.5	1	1	1	1
Low-Mod.	# Emitters	1	2	5	4	6
	Emitter Rate (GPH)	0.5	1	1	2	2
Moderate	# Emitters	1	3	7	6	9
	Emitter Rate (GPH)	1	1	1	2	2

Emitter Selection For Trees

Plant Water Use	Plant Diameter in Feet	10	15	20	25
Low	# Emitters	7	8	14	22
	Emitter Rate (GPH)	1	2	2	2
Low-Mod.	# Emitters	6	14	25	40
	Emitter Rate (GPH)	2	2	2	2
Moderate	# Emitters	9	20	36	56
	Emitter Rate (GPH)	2	2	2	2

*Inline Drip Tubing Lengths (0.6 GPH) For Trees**

Plant Water Use	Plant Diameter in Feet	10	15	20	25
Low	Feet Tubing	24	54	96	150
	Emitter Spacing	24”	24”	24”	24”
Low-Mod.	Feet Tubing	32	72	128	200
	Emitter Spacing	18”	18”	18”	18”
Moderate	Feet Tubing	30	68	120	188
	Emitter Spacing	12”	12”	12”	12”

* Inline drip tubing at .5 GPH emitters use 20% more tubing and inline drip tubing at .9 GPH use 33% less tubing.

Emitter Placement on a Slope

If you have a sloping yard, you will need to take care when planning your system. Slopes have a unique wetting pattern because water from the top supplies the runoff water that moves down the slope. This requires dividing the slope into separate horizontal stations to accommodate this pattern.

Water Saving Tip

Water runoff from yards can send fertilizers, herbicides and pesticides into the storm drains where it will eventually reach Lake Mead and our drinking water. By preventing water runoff on slopes, drip irrigation protects water quality.

- Incorrect placement will result in water accumulating down slope of the root zone.
- Locate two-thirds of the emitters above the plants on the slope so the wetting pattern remains within the root zone.
- Watering basins may be needed to prevent runoff.
- When using watering basins, make sure the basin will dry within 12 hours or root rot may occur.

FIGURE 4: The tree on the left will be subject to wind damage and poor growth due to improper emitter placement and restricted root growth. The middle tree illustrates proper emitter placement for slope plantings. The shrub on the right uses a watering basin, or berm, to hold water near the root zone.

INSTALLING THE IRRIGATION SYSTEM

Now is when taking the time to plan out your irrigation system will pay off because it is time for installation. Installing your irrigation system correctly will increase the life-span of the system, decrease the amount of maintenance problems you might encounter, and will help keep your landscape looking healthy. To install your irrigation system the most common tools you will need are a shovel (a narrow trenching shovel works best), pipe cutter, PVC cement and primer, irrigation hole punch and assorted hand tools (tape measure, wire cutters, wire strippers, channel locks and / or strap wrench, just to name a few).

Understanding the Water Source

Before the installation process can begin, locate the main water service line to your house so you can decide the location of the valve assembly. The sample irrigation plans on pp. 29-30 illustrate typical connections of the main service line to the meter. The water is delivered to your home through the service line with a shutoff valve to the house located about 18" away. The irrigation line is then usually connected between the shutoff and the meter. It is highly recommended that you install a shut off valve after your connection to the service line, before the backflow prevention device. If for any reason you have a problem with the backflow prevention device you can shut off your irrigation system without having to shut off the water to your home.

Site Preparation

Mark the location of the main components with chalk, spray paint or flags. Next, dig the trenches and holes that are required. The irrigation main line is recommended to be installed between eight (8) to 12 inches deep. PVC lateral lines for the drip system (and any sprinklers) are buried six (6) to (8) eight inches deep. Polyethylene (poly) tubing is buried three (3) to (4) four inches deep. Poly tubing is sometimes laid on top of the ground, but will only last three (3) to four (4) years before becoming brittle, and is more prone to damage.

Installation

NOTE: The backflow prevention device is an essential component that needs to be installed in your home between your service line and the irrigation system. Some homes may have a backflow prevention device installed. If your home does not have one, check local community codes for proper type and for installation requirements. If one is installed, make sure that it is installed correctly to meet local codes and your needs. The proper backflow prevention device is essential to avoid any contaminate (chemicals, fertilizers, etc.) from being pulled into your home drinking water. If you plan on incorporating any type of fertilizers or chemicals in you irrigation system, it is required that you have a reduced pressure principal assembly installed for the backflow prevention device.

The installation of your irrigation system begins at the control valve assembly. It consists of the control valve, the filter and the pressure regulator respectively. See Details B and C (pages 31-32).

After you've put together your control valve assembly, lay out any necessary piping as illustrated on your plan. Most stations may require PVC sub-mains to supply water to different areas covered by the station, without regard to the available flow provided by poly pipe. Refer to the chart on page 22 for details on the maximum amount of water that should flow through different types and sizes of piping. For example, ½ inch poly tubing can flow up to 3 GPM. To convert GPM to GPH multiply GPM times 60; 3 GPM x 60 equals 180 GPH. Three quarter inch PVC pipe can flow up to 10 GPM, so you can connect ½ poly tubing at three different places to the ¾" PVC pipe. Next, you will connect the ½ inch poly tubing for the drip laterals corresponding with your design. You do not need to maximize tubing to 180 GPH at the initial installation because PVC pipe can be installed from the valve out to different areas of the landscaping. Poly tubing can then be connected to increase the capacity of the zone when needed. If you choose to lay your poly tubing above ground, use stakes to anchor the tubing then install a mulch to cover it. Remember though, that installing the poly tubing on the ground's surface will reduce its life and it will be more prone to vandalism.

Assembling the drip tubing will go faster if the poly tubing has been laid out in the sun for several minutes. This allows the plastic material to become soft and easy to manage. Cut the poly tubing to the desired lengths using a pipe cutter or hand pruner. Attach drip lines to the drip laterals by inserting the poly tubing into the fittings. Note that poly tubing sizes may vary from different manufacturers. It is best to use fittings produced by the same manufacturer, or a fitting recommended by the manufacturer, as some fittings may not connect the tubing correctly

Keep the ends of the tubing accessible either in a valve box or above ground for routine flushing. Once the circuit of the drip laterals and drip tubing are completely installed, turn the water on to flush the system of any debris before attaching the emitters. Remember to replace the end caps!

Place emitters according to the system design. They should be placed away from the base of plants to deliver a uniform amount of water. Install at least one emitter on the original plant root ball; these emitters should be relocated in about six months. When emitters are installed on a slope, place two-thirds of the emitter's uphill of the plants root ball. See Figure 4, p. 19 for proper emitter placement on slopes.

To install an emitter on ½ inch tubing, hold the tubing with one hand and, with your hole punch in the other hand. Puncture the tubing for the fitting or emitter. It is important that you use the proper hole punch recommended by the emitter manufacturer to prevent leaks. When using the wrong size hole punch you can cause the poly tubing to rip and leak. These leaks can waste large amounts of water and apply more water than the emitter, causing overwatering and possible plant death.

Emitter outlets should be installed one to two inches above the soil surface to prevent clogging and to make visual inspections easier. Sample emitter placements can be seen on Detail A, page 31.

Now you are ready to turn the system on and inspect your handiwork. Pay special attention to the emitter farthest away from the water source as well as to those on slopes to check if the output from the emitter is similar to the emitters closest to the control valve. If not, then you may have debris in the line, too many emitters on the line or too small of piping in the system.

After careful examination bury the PVC lateral lines six (6) to eight (8) inches deep and the poly lateral lines three (3) to four (4) inches deep.

Now that you have buried the piping, turn on the system to check for leaks, and that the emitters are all working and installed correctly to provide water to the plants.

Tube and Pipe Flow Chart

	Class 200, SDR 21 IPS PVC Pipe	**Sch. 40 IPS Pipe**	**Polyethylene Pipe**
Size	Flow GPM / Pipe ID	Flow GPM / Pipe ID	Flow GPM / Pipe ID
1 / 2”	6 GPM / 0.716	4 GPM / 0.622	3 GPM / 0.600
3 / 4”	10 GPM / 0.93	8 GPM / 0.824	8 GPM / 0.824
1”	17 GPM / 1.189	13 GPM / 1.049	13 GPM / 1.049
1 1 / 4”	27 GPM / 1.502	23 GPM / 1.38	22 GPM / 1.380

* Note 1 / 2" Class 200, SDR 21 IPS PVC Pipe is normally manufactured, Flow and Pipe ID is for Class 315, SDR 13.5 IPS PVC Pipe.

MAINTENANCE

Drip irrigation does require routine inspection and maintenance to remain efficient. Such maintenance, while similar to that needed for conventional irrigation systems, is relatively simple and requires a minimal time investment.

Avoiding Common Problems With Drip Irrigation

With routine maintenance and sound planning you can avoid common problems associated with drip irrigation. Below is a discussion of some of those problems and how to plan for them.

Clogging
Drip emitters may clog. With adequate filtration and a good maintenance program clogging can be reduced.

Restricted Root Development
Proper placement of emitters means root growth will be uniform, expansive and healthy. Make sure to plan for mature plant size and install emitters to cover at least two-thirds the size of the adult plant's canopy.

Rodents and Pets
Although gophers tend to avoid wet soils, dogs and other animals may chew tubing and emitters. In areas where this could be a problem the use of rigid PVC pipe and protection for emitters, such as installing emitters that attach to PVC risers, may be necessary.

Heavy Traffic or Vandalism
Polyethylene tubing or poly tubing on or near the surface in areas of heavy foot traffic or children's play areas may be easily broken or disconnected. Systems constructed from rigid PVC pipe are sometimes better suited in these situations. In areas where vandalism may be prevalent bury the system at least six (6) inches deep with the outlet installed one inch above the surface.

The benefits far outweigh the few drawbacks of drip irrigation. With proper design, installation, maintenance and scheduling drip irrigation will provide a healthy, attractive and water efficient landscape.

Maintenance and Visual Checks

Regular visual checks will make up the bulk of your maintenance program. Keeping your eyes open for clogged emitters, leaks or other damage will allow you to catch problems before serious damage to your landscape occurs. Check all emitter outlets regularly for location and flow. Adjust, clean, or replace emitters as needed.

Indicators

An obvious indicator of damage to your drip system is the appearance of the plants themselves. Failing plant health is often linked with improper watering. Drought stressed plants will show signs of wilting. Over irrigation can also result in a plant wilting because of drowning roots. Check the soil below a wilted plant for lack of water or overwatering. Make changes to your emitter layout or watering schedule accordingly.

Regular reviews of your drip system can help prevent water waste.

Soil conditions also indicate irrigation problems. If the soil appears too wet, look for damaged tubing. Leaky fittings may also be the problem. If the soil appears too dry, look for clogged emitters or kinked tubing. A simple change in your watering schedule may be all that is needed to adjust the moisture level in the soil.

Flush / Clean Filters

Regular flushing and cleaning of filters maintains the system's efficiency. Checking them at least once every two months is a good schedule to follow. Most filters will have some type of cap. Remove the cap. Flush some water through the filter, insuring that the actual filter stays in the filter body. Remove the filter and clean or replace it if it is damaged or cannot be cleaned. Replace the filter and cap.

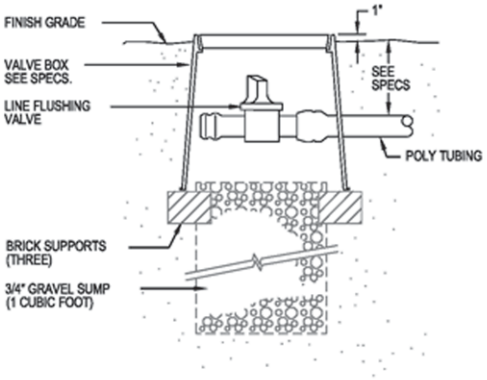

MANUAL LINE FLUSHING VALVE
NOT TO SCALE

Flushing the System

Flushing the tubing lines should be done periodically, at a minimum of twice a year during spring and fall. Systems using water sources with sand and other large particles should be flushed more often in the summer when the efficiency of the system is most critical to plants. At least once a month during the summer time is recommended. Always flush the system after any repair of damaged lines.

To flush the system, remove the end caps and turn the valve on. Let the water run until it runs clear. Any dirt, debris or

residue in the system should be expelled through the opened end cap. Remember to replace the end caps!

Additional Tips

- Secure loose tubing. Loose irrigation tubing is more susceptible to damage.
- Algae buildup may become a problem with the use of well water. If during your regular filter checks algae is seen, granular chlorine or other specific products specifically designed to combat algae may need to be flushed through the system. Check with your local distributor for proper use.
- Adjusting the irrigation schedule regularly is essential, since watering requirements vary throughout the year. Become familiar with your controller and be aware that the amount of time you water may vary due to soil type and weather.
- As your landscape matures and changes, make sure your irrigation system matures with it. This may include moving, removing or adding emitters. As they mature, most plants will require more emitters placed farther away from the base to ensure healthy root development.
- If converting a turf heavy landscape but keeping trees formerly anchored into the turf, water remaining trees similar to how you watered the turf and, over a period of one to two years, cut back on how often you water. Begin to water less frequently, but for longer periods of time till you are only watering one, or maybe two days a week in the summer. Most trees that die after turf removal die from a lack of water supplied to existing roots, or damage to the root structure caused during the turf removal.

SCHEDULING

Scheduling for Drip Irrigation is no different than scheduling for conventional irrigation. Watering schedules are determined by several factors including soil conditions, climate, water conditions, type and size of plants, plant water needs and the rate water is being applied to the landscape. In conventional irrigation the water application rate can be calculated relatively easily. For drip irrigation, the number of emitters per plant and the area being covered can be used to determine the water application rate. In this guide we will provide some general information on determining a water schedule for your landscaping, but as mentioned above, there are many factors involved in drip scheduling and the health of your landscape will be the best indicator for fine tuning your drip irrigation schedule.

The "Estimated Plant Water Needs" chart on the following page will help you determine the approximate plant water needs per week. This chart can be used for both young and established plants. The chart was developed using local weather conditions, estimated plant needs, and the efficiency of a typical drip irrigation system. The "Frequency of Irrigation" chart suggests the number of days to water. Please note that these charts provide general guidelines for estimating landscape water needs. New landscapes will require shorter, more frequent irrigation cycles. As the landscape matures you will need to water less frequently, but for longer cycles. The suggestions are based on plantings in sandy loam soil and a controller with a seven day schedule. Pure loam and clay soils will require less frequent watering. Generally, a drip irrigation system should not operate more than 45 to 60 minutes at one time. A good rule of thumb is that when you see water beginning to puddle, turn off the system before you have water runoff.

Water Saving Tip

Especially during the hot summer months, set your clock to water during the early morning hours and reduce water loss due to evaporation.

Remember that watering restrictions are in effect in Southern Nevada. These restrictions, such as the time of day and number of days per week watering is allowed, apply to drip irrigation. Check with your local water supplier for specific restrictions in your area. For up to date information please visit www.snwa.com.

After allowing the system to operate for a few days, take some time to see how it is penetrating the soil and watering your landscape. Observation is very important in determining how to operate your system. To check for soil moisture, take a shovel or trowel and remove some soil near several emitters. Ideally, the soil should be moist, not wet, around the plant's root zone.

Estimated Plant Water Needs

Plant Type & Water Need	Canopy Dia.	Max. GPW *	Estimated Water Needs Per Week											
			Jan	Feb	Mar	Apr	May	Jun	Jul	Aug	Sep	Oct	Nov	Dec
Low Shrub	1	0.4	0.1	0.1	0.2	0.2	0.3	0.3	0.3	0.3	0.2	0.2	0.1	0.1
Low Shrub	2	1.6	0.3	0.4	0.6	0.9	1.2	1.3	1.3	1.2	0.9	0.6	0.3	0.2
Low Shrub	4	6.4	1.1	1.6	2.5	3.6	4.6	5.4	5.2	4.7	3.6	2.4	1.4	1
Low Shrub	6	15	2.4	3.5	5.7	8.2	10.4	12	11.7	10.5	8.2	5.4	3.1	2.2
Low Shrub	8	26	4	6	10	15	18	21	21	19	15	10	6	4
Low Shrub	10	40	7	10	16	23	29	33	33	29	23	15	9	6
Med Shrub	1	1	0.2	0.2	0.4	0.6	0.7	0.8	0.8	0.7	0.6	0.4	0.2	0.2
Med Shrub	2	4	0.7	1	1.6	2.3	2.9	3.3	3.3	2.9	2.3	1.5	0.9	0.6
Med Shrub	4	16	2.7	3.9	6.3	9.1	11.5	13.4	13	11.7	9.1	6	3.5	2.5
Med Shrub	6	36	6	9	14	20	26	30	29	26	21	14	8	6
Med Shrub	8	64	11	16	25	36	46	54	52	47	36	24	14	10
Med Shrub	10	101	17	24	40	57	72	84	81	73	57	38	22	16
Low Tree	10	40	7	10	16	23	29	33	33	29	23	15	9	6
Low Tree	15	91	15	22	36	51	65	75	73	66	51	34	20	14
Low Tree	20	161	27	39	63	91	115	134	130	117	91	60	35	25
Low Tree	25	252	42	61	99	142	180	209	203	183	142	94	54	39
Low Tree	30	363	61	88	143	204	259	301	293	263	205	135	78	56
Low-Med Tree	10	71	12	17	28	40	50	59	57	51	40	26	15	11
Low-Med Tree	15	159	27	38	62	89	113	132	128	115	90	59	34	24
Low-Med Tree	20	282	47	68	111	159	201	234	228	205	159	105	61	43
Low-Med Tree	25	441	74	107	174	248	315	366	356	320	249	164	95	68
Low-Med Tree	30	635	106	154	250	357	453	527	513	461	359	237	137	98
Med Tree	10	101	17	24	40	57	72	84	81	73	57	38	22	16
Med Tree	15	227	38	55	89	127	162	188	183	165	128	85	49	35
Med Tree	20	403	68	97	159	227	288	334	326	293	228	150	87	62
Med Tree	25	630	105	152	248	354	450	523	509	457	356	235	136	97
Med Tree	30	907	152	219	357	510	647	752	732	658	513	338	196	140

Frequency of Irrigation

	Jan	Feb	Mar	Apr	May	Jun	Jul	Aug	Sep	Oct	Nov	Dec
Shrub	1	1	1	2	2	3	3	3	2	2	1	1
Tree	1	1	1	2	2	2	2	2	2	1	1	1

The above chart contains the estimated number of days per week to water established plants. The actual frequency depends on the type of soils, mulch covers, weather conditions, type of maintenance (both landscape and irrigation), irrigation system performance, and plant water needs. Neither the authors nor the publishers hold any responsibility for any damages or losses that might occur from the use of these estimates.

The following is an example of how you can set up a watering schedule for your drip system based on a 25' diameter Mesquite tree during the month of June.

- **STEP 1:** Determine the amount of water needed per week based upon the "Estimated Plant Water Needs" chart. For a 25' diameter Mesquite, a low water use tree, 209 gallons of water per week are required in June.

- **STEP 2:** Determine the number of days to water based on the "Frequency of Irrigation" chart. For our example we will limit watering to two days per week

- **STEP 3:** Select the number of emitters needed for your plant size based on the "Emitter Chart", page 18. Be sure to multiply the number of emitters suggested by the emitter rate in order to get the number of gallons applied. For our example, the suggested number of emitters for a tree with a 25' diameter canopy is 22 emitters x 2 GPH, applying 44 gallons of water per hour.

- **STEP 4:** Now, do a few calculations using the figures you have determined. 209 gallons / 2 days = 104.5 gallons needed per day. 104.5 gallons / 44 gallons applied in one hour = 2.4 hours. There are 60 minutes in one hour, so 2.4 hours x 60 equals 144 minutes of run time required.

- **STEP 5:** Set your irrigation control to water for 144 minutes a day, two days per week for the month of June. To avoid runoff or applying water below the root zone, the total time should be broken up into three 48 minute run times spread about two hours apart.

Water Saving Tip

Properly installed drip irrigation can usually be scheduled less frequently than sprinkler irrigation. Besides saving water, experts agree that longer, less frequent scheduling of drip irrigation is much healthier for plants than sprinkler irrigation.

SAMPLE IRRIGATION PLANS AND DETAILS

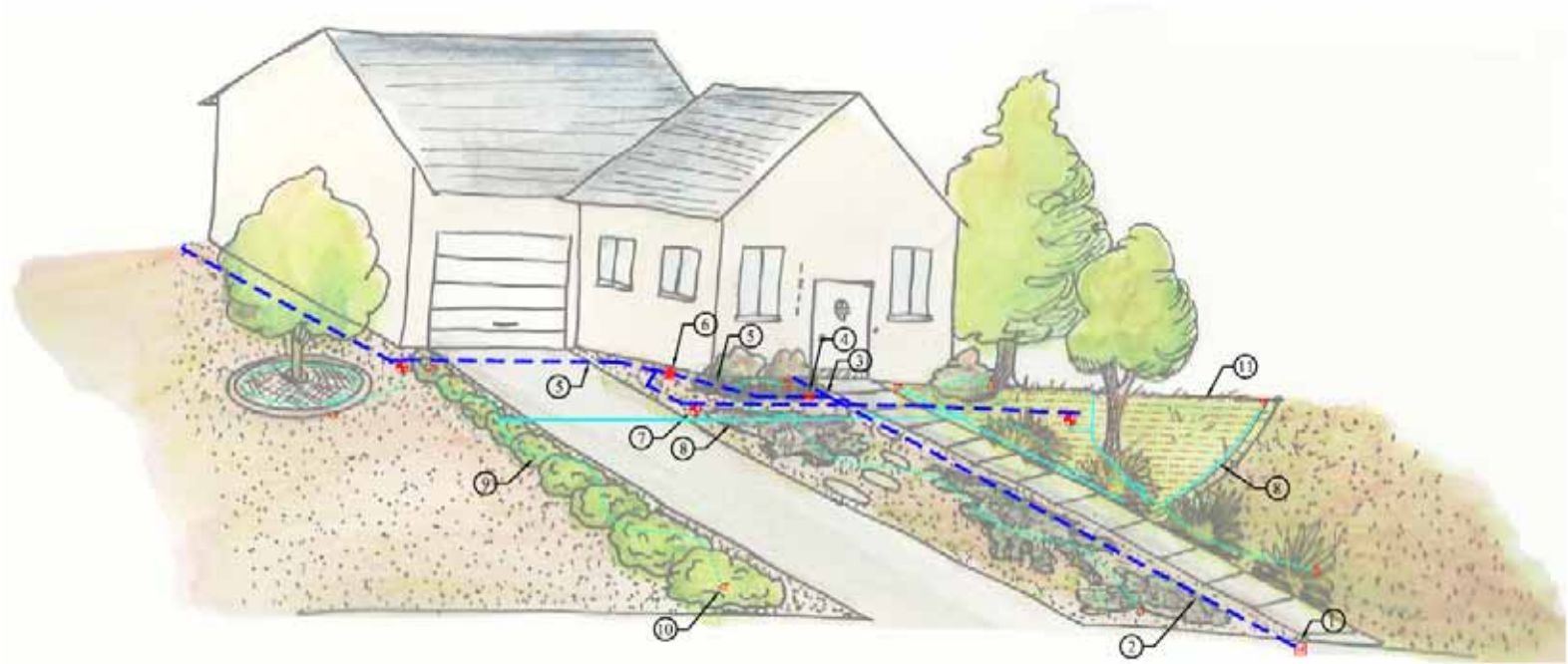

1. Water Meter
2. Potable Water Line to Home
3. Connection to Potable Water Line to Irrigation System
4. Shutoff Valve
5. Irrigation Main Line
6. Backflow Prevention Device
7. Irrigation Control Valve Assy.
8. PVC Sub-Main Line
9. Poly Tubing
10. Flush Valve
11. Inline Subsurface Drip Irrigation

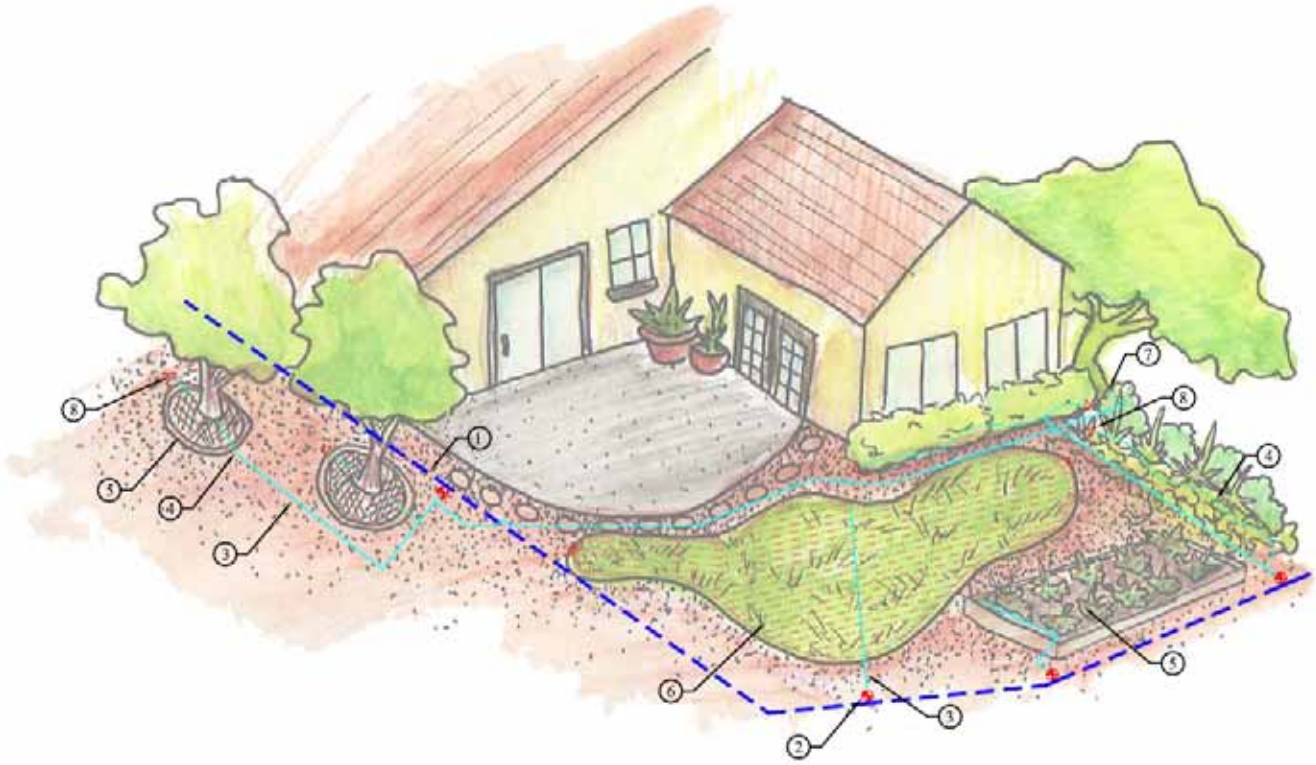

1. Irrigation Main Line
2. Irrigation Control Valve Assy.
3. PVC Sub-Main Line
4. Poly Tubing
5. Inline Drip Tubing
6. Inline Subsurface Drip Irrigation
7. Poly Tubing to Inline Tubing Around Tree
8. Flush Valve

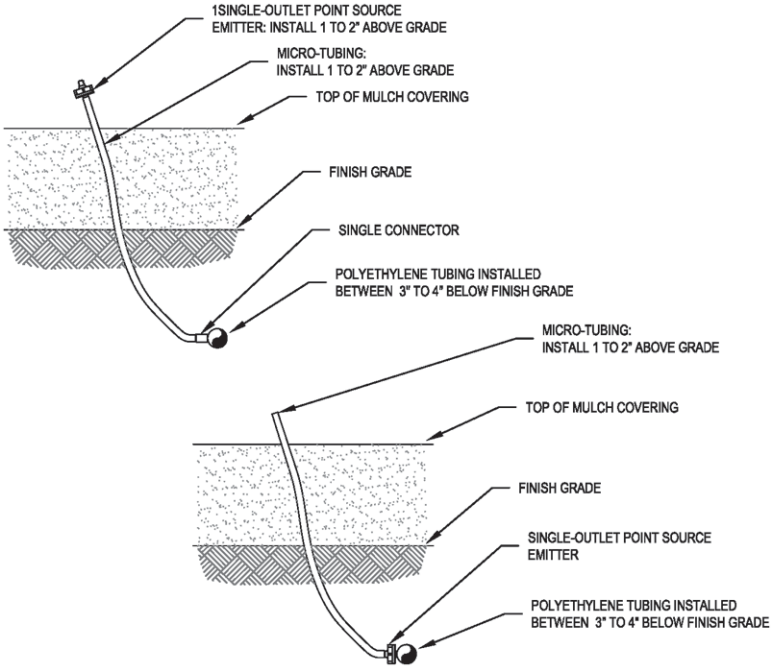

A SINGLE-OUTLET EMITTER DETAIL
NOT TO SCALE

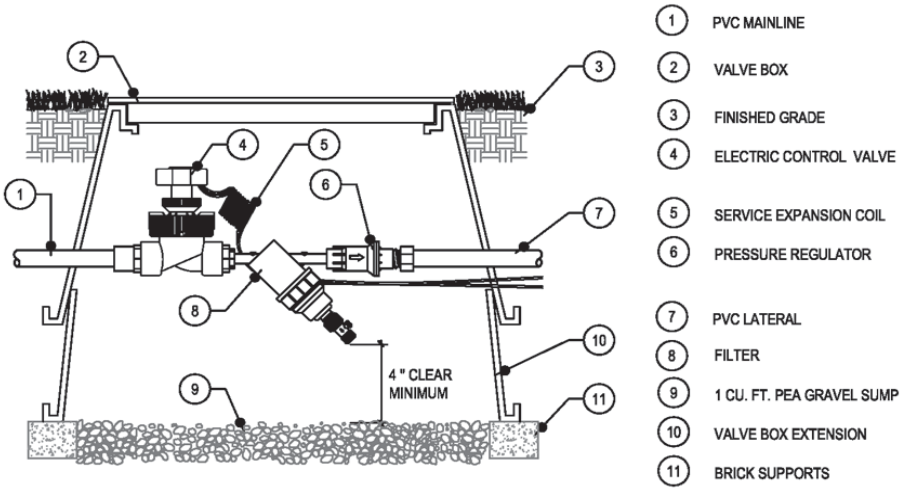

SECTION/ELEVATION

B DRIP CONTROL VALVE DETAIL
NOT TO SCALE

NOTES:
1. FLUSH ALL PIPING PRIOR TO INSTALLING VALVE.
2. WRAP ALL THREADS WITH TEFLON TAPE. 2 TO 3 WRAPS MAXIMUM.
3. COMPACT SOILS AROUND VALVE BOX TO 80% OF ORIGINAL DRY DENSITY.
4. FITTING AND NIPPLES TO BE SAME SIZE AS RCV.
5. TAPE GEOFABRIC TO PIPE NIPPLES AND BOX.
6. ALL WIRE TO BE INSTALLED AS PER LOCAL CODE.
7. BOX COLOR - GREEN IN TURF AND SHRUB BEDS, AND TAN IN D.G. AREA.
8. ALL WIRE TO BE INSTALLED & SUPPLIED AS PER LOCAL CODE.

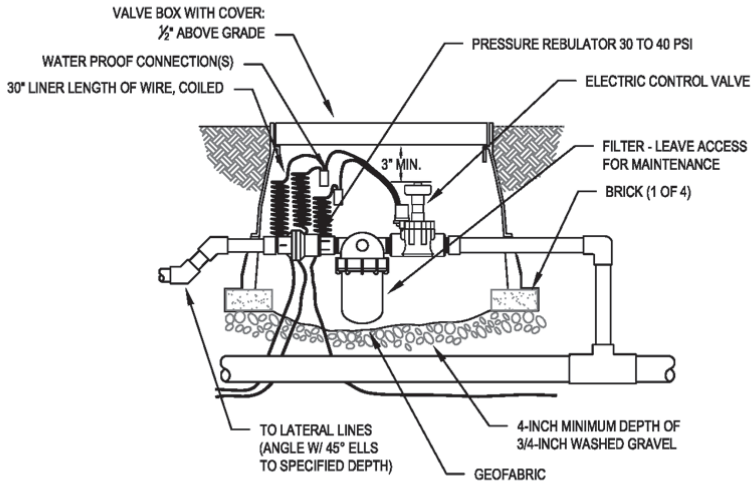

C DRIP CONTROL VALVE DETAIL
NOT TO SCALE

NOTE: NSTALL EMITTERS ON THE UPHILL SIDE OF THE ROOTBALL AT SLOPE LOCATIONS. EQUALLY SPACE THE REQUIRED NUMBER OF EMITTERS AS PER DETAILS AND NOTES TO MEET THE PLANT WATER REQUIREMENTS AT MATURITY.

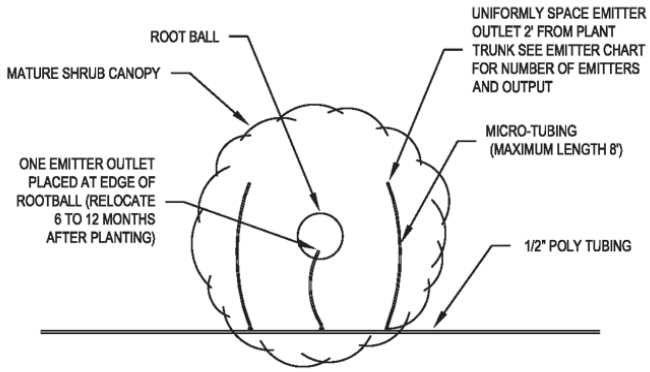

D SHRUB EMITTER PLACEMENT DETAIL
NOT TO SCALE

NOTE:
INSTALL EMITTERS SPACED 2' APART PER DRIP EMITTER LOCATION DETAIL. INSTALL A FLUSH END CAP ON THE END OF EVERY LATERAL PIPE PER END CAP DETAIL M. INSTALL TWO-THIRDS OF THE EMITTERS ON THE UPHILL SIDE OF THE ROOTBALL AT SLOPE LOCATIONS.

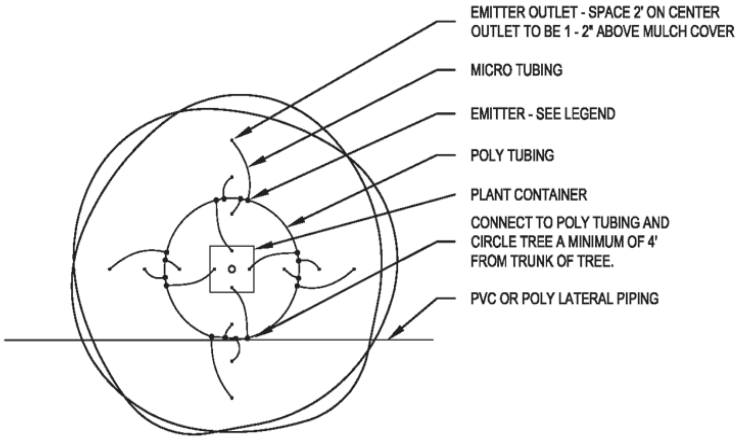

E TREE EMITTER PLACEMENT - POLY DETAIL
NOT TO SCALE

NOTE:
INLINE DRIP TUBING IS RECOMMENDED TO BE INSTALLED 4" BELOW SOIL SURFACE IF IT DOES NOT INTERFERE WITH EXISTING ROOT SYSTEM. IF INSTALLED LESS THAN 4", STAPLE TUBING IN PLACE. MULCH COVER PLACED OVER SOIL SURFACE. SEE IRRIGATION CHART FOR QUANTITY OF INLINE DRIP TUBING PER PLANT. INSTALL INLINE DRIP TUBING A MINIMUM OF 24" TO 36" FROM TREE TRUNK.

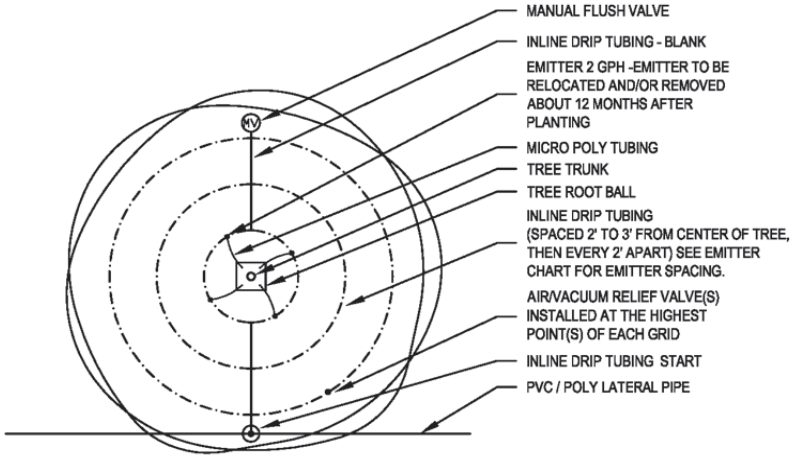

F NEW TREE IN-LINE TUBING DETAIL
NOT TO SCALE

NOTE:
INLINE TUBING WILL BE INSTALLED 2" BELOW SOIL SURFACE AND ANCHOR IN PLACE WITH TUBING STAKES. COVER A MINIMUM OF 125% OF EXISTING TREE CANOPY. INSTALL MULCH COVER PLACED OVER SOIL SURFACE WITH MINIMUM DEPTH NEAR PLANT TRUNK. INSTALL THE INLINE TUBING TO COVER THE EXISTING ROOT SYSTEM OF THE PLANT. INSTALL A MANUAL FLUSHING VALVE AT THE END OF EVERY ZONE PER MANUFACTURES SPECIFICATIONS. NO PVC PIPING WITHIN 8' OF BASE OF PLANT.

ON SLOPES SPACE THE TUBING 18" TO 22" APART AT THE TOP OF SLOPE AND 26" TO 30" APART AT BOTTOM OF SLOPE. RUN ALL TUBING HORIZONTAL TO SLOPE.

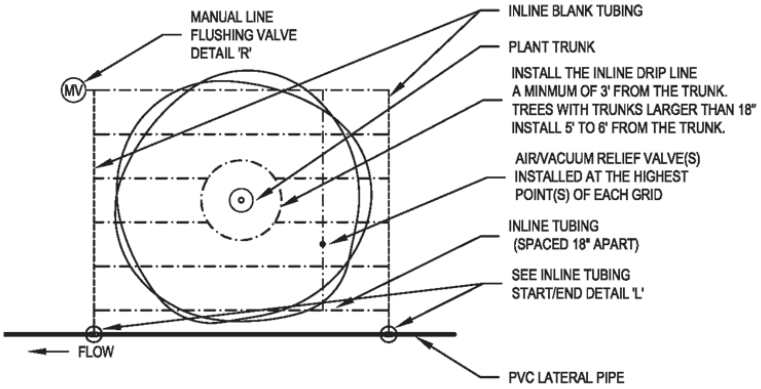

G INLINE TUBING - EXISTING TREE DETAIL
NOT TO SCALE

NOTE:
INLINE TUBING WILL BE INSTALLED 4" BELOW SOIL SOIL SURFACE. MULCH COVER PLACED OVER SOIL SURFACE. SEE IRRIGATION NOTES FOR QUANTITY OF INLINE TUBING PER PLANT. INSTALL A FLUSHING VALVE AT THE END(S) OF EVERY INLINE TUBING ZONE.

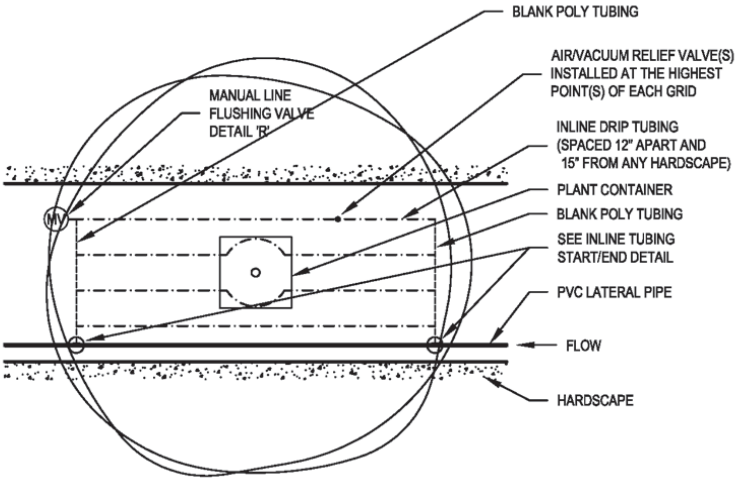

H TREE IN-LINE TUBING DETAIL - STREETSCAPE
NOT TO SCALE

NOTE:
INLINE DRIP TUBING IS RECOMMENDED TO BE INSTALLED 4" BELOW SOIL SURFACE IF IT DOES NOT INTERFERE WITH EXISTING ROOT SYSTEM. IF INSTALLED LESS THAN 4", STAPLE TUBING IN PLACE. MULCH COVER PLACED OVER SOIL SURFACE. SEE IRRIGATION CHART FOR QUANTITY OF INLINE DRIP TUBING PER PLANT. INSTALL INLINE DRIP TUBING A MINIMUM OF 24" TO 36" FROM TREE TRUNK.

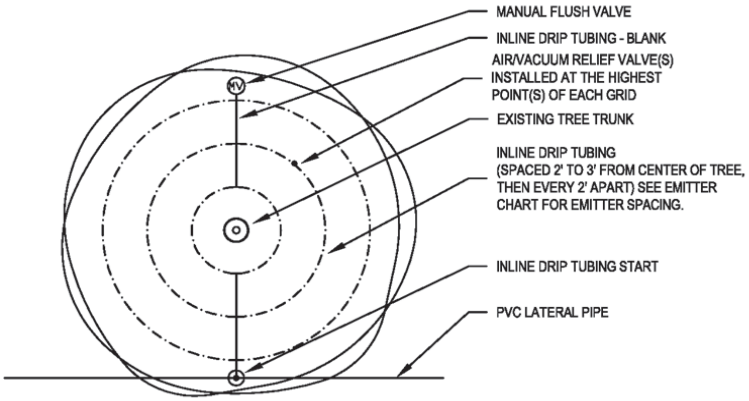

I EXISTING TREE IN-LINE TUBING DETAIL

NOT TO SCALE

NOTE:
INLINE DRIP TUBING SHOULD BE INSTALLED 5" BELOW SOIL SURFACE. INSTALL AIR/VACUUM RELIEF VALVE(S) AT THE HIGHEST POINT(S) OF THE INLINE DRIP TUBING IN EACH GRID AND AN AUTOMATIC FLUSHING VALVE AT THE END(S) OF EVERY TECHLINE GRID PER MANUFACTURES SPECIFICATIONS. WHEN USING A INLINE DRIP TUBING THAT HAS BUILD IN CHECK VALVES DO NOT USE AIR/VACUUM RELIEF VALVES AND USE A MANUAL FLUSH VALVE INSTEAD OF AN AUTOMATIC FUSHING VALVE.

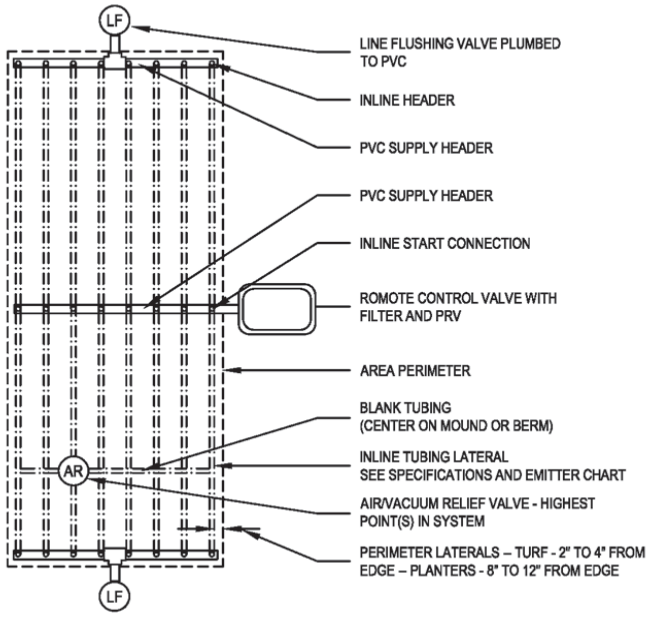

J LAWN IN-LINE TUBING DETAIL

NOT TO SCALE

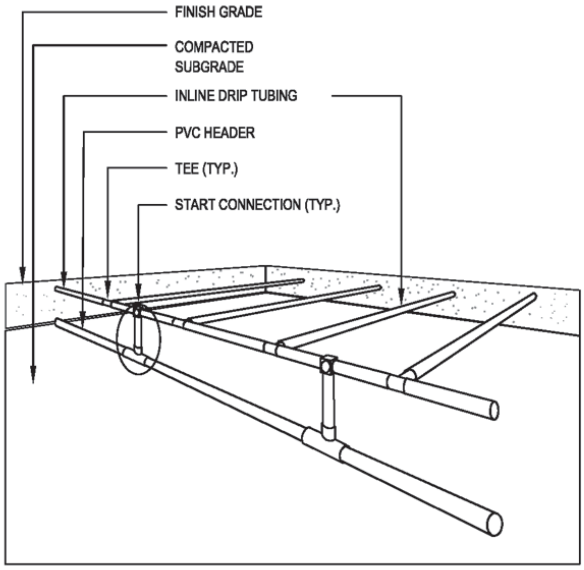

K IN-LINE HEADER DETAIL
NOT TO SCALE

TROUBLESHOOTING

Automatic Control Valve Does Not Operate Properly - Check that you selected the correct valve size for your water flow. Clean or replace the diaphragm. Check the wiring or replace the solenoid.

Emitters Aren't Flowing - Check that your filter is properly installed. Check that your end cap is screwed on tightly.

Emitters Have Uneven or No Flow - Check the drip line for leaks or cracks. Clean or replace the filter. Replace the emitter; check that the pressure regulator is operating at the proper pressure.

Emitters At the End of the Dripline Have Uneven or No Flow - Check for too many emitters on the line. You should not exceed the recommended flow rate of 220 GPH.

Emitters Popping Out of Polytubing - You might need to replace the pressure regulator if the pressure is too high. Check that the emitters were installed with the correctly sized hole punch.

Many Clogged Emitters - Look for a break in the drip line.

Pressure Regulator Leaking - Remove the regulator and clean the washer to remove possible dirt stuck in the line. Check that the regulator is installed on the downstream side of the control valve.

Fittings Separating From 1/2" Polytube - The fittings aren't installed properly. Make sure tubing is pushed far enough into the compression fitting and that the proper fittings are being used.

Plants Appear Stressed - Check that the plant emitters are not plugged. Check your filter and replace emitters as needed. Check for cracks or breaks in the irrigation lines. Add more time to the watering schedule if plants are not receiving enough water.

GLOSSARY

Berm - A sloped earth wall or embankment used to prevent water runoff around a plant or plantings.

Circuit - A group of plants located on the same irrigation valve, receiving the same amount of water.

Foliage - The leafy area of a tree or plant.

Hardscape - Sidewalks, patios and walkways.

Hydrozone - A grouping of plants served by one control zone and irrigated by a low-volume system. A hydrozone typically has a common microclimate and may consist of plants with like water requirements or with mixed water requirements.

Microclimate - A small sub-climate within a project site created by adjacent hardscape, shade or sun exposure.

Mulch - Any substance, (such as compost, straw, bark or gravel), spread on the soil surface to conserve soil moisture and decrease soil erosion.

Retrofit - The process of changing an existing conventional irrigation system into a low-volume system

Root Zone - The area of soil where plant roots are active.

Watering Basin - A constructed, shallow area around the base of a plant that holds water close to the plant's root zone.

Joseph H. Fortier, ASIC, CIC, CID,CGIA, CLIA

Joe currently works for the Clark County School District as the Civil & Landscape Quality Assurance Construction Inspector / Manager. Joe is also the president and founder of Mojave Water Management, a Landscape Irrigation consulting firm serving the west since 1993. Joe has more than 29 years of experience in the landscape and irrigation industry, having worked in landscape / irrigation wholesale distribution for 14 years and for the Southern Nevada Water Authority as a Conservation Programs Coordinator for almost 7 years. Between 1999 and 2004, Joe ran Mojave Water Management as a full time consulting firm, and now part time taking on challenging projects. In November 2004, Joe began working at the Clark County School District because of the challenge of the position to improve the construction of the landscaping and irrigation systems. Joe is active with many local, regional, and national landscape and irrigation associations.

Joe is an active member of the American Society of Irrigation Consultants and has served on the Board of the Southwest Chapter of the American Society of Irrigation Consultants. Joe is active with the Irrigation Association, having served 7 years on the Certification Board, in 2003 as Chair, and in 2005 served on the Board of Directors. Joe is a Certified Irrigation Contractor; Certified Irrigation Designer in Golf, Commercial, and Residential; Certified Golf Irrigation Auditor; and Certified Landscape Irrigation Auditor from the Irrigation Association. He serves on many committees and is an authorized Instructor. Joe is an EPA WaterSense partner who has demonstrated knowledge of and commitment to water-efficient techniques. Also, Joe is a founding member and current President of the Desert Green Foundation which hosts the Desert Green Conference every fall in Las Vegas, Nevada promoting education to the Green Industry.

When Joe started in the landscape and irrigation industry, drip irrigation was beginning to be utilized more in landscaping due to the benefits seen in agricultural. Joe realized drip irrigation was going to be an important part of the future for landscaping. He started educating himself about drip irrigation whenever he could. Through the years seeing the successes and the failures of drip irrigation, witnessing his own successes and failures in his yard; speaking with drip irrigation manufacturers, consultants, designers, installation contractors, maintenance contractors, and homeowners; and reading what he could on drip irrigation Joe realized that there was a lot of misconception about designing drip irrigation for efficiency. To improve the design, installation, and maintenance of drip irrigation, Joe has spent numerous hours in the development of this drip irrigation guide. He would like to thank all the people who have helped in the development of the guide, especially Kimberly Vilt in helping to write and edit this guide, and the Conservation District of Southern Nevada for taking on the project of producing and publishing the guide.

Bibliography

DIG Drip Irrigation Installation Guide, DIG Irrigation Products, 2006.

Drip Irrigation for Every Landscape and All Climates, Kourik, Robert, Metamorphic Press, Santa Rosa, California 1992.

Drip Irrigation Guidelines, East Bay Municipal Utility District, 1991.

Estimating Water Requirements of Landscape Plantings: The Landscape Coefficient Method, Cooperative Extension University of California, Division of Agriculture and Natural Resources, Leaflet 21493.

Guidelines for Landscape Drip Irrigation Systems, Arizona Landscape Irrigation Guidelines Committee, July 2001.

Landscape Drip Irrigation Design Manual, by Keith Shepersky, Rain Bird Sales, Inc., 1984.

Low-Volume Landscape Irrigation Design Manual, Rain Bird Corporation, 2000.

Micro-Irrigation Design Manual, Michael J. Boswell, Hardie Irrigation, August 1990.

Subsurface Dripperline Guide, Netafim USA, August 2006.

Tipton, Jimmy L., Arid Ornamentals Extension Specialist, University of Arizona Department of Plant Sciences.

Water Use Classification of Landscape Species, (WUCOLS Project), Cooperative Extension University of California, February 1992.

Photo, Illustration and Design Credits

Irrigation Details provided by Mojave Water Management, Netafim USA, Rainbird Corporation and Toro Irrigation
Illustrations for Figures 1-4 and Sample Landscapes by Kimberly Vilt
Photographs courtesy of Mojave Water Management

Funding provided by a grant from the Bureau of ReclamationThe views and conclusions contained in this document are those of the authors and should not be interpreted as representing the opinions or policies of the U.S. Government. Mention of trade names or commercial products does not constitute their endorsement by the U.S. Government.

Conservation District of Southern Nevada
Serving Clark County

Conservation District of Southern Nevada
5820 S.Pecos Rd., A-400
Las Vegas, NV 89120
ph: 702.262.9047 ext. 5
www.cdsn.org